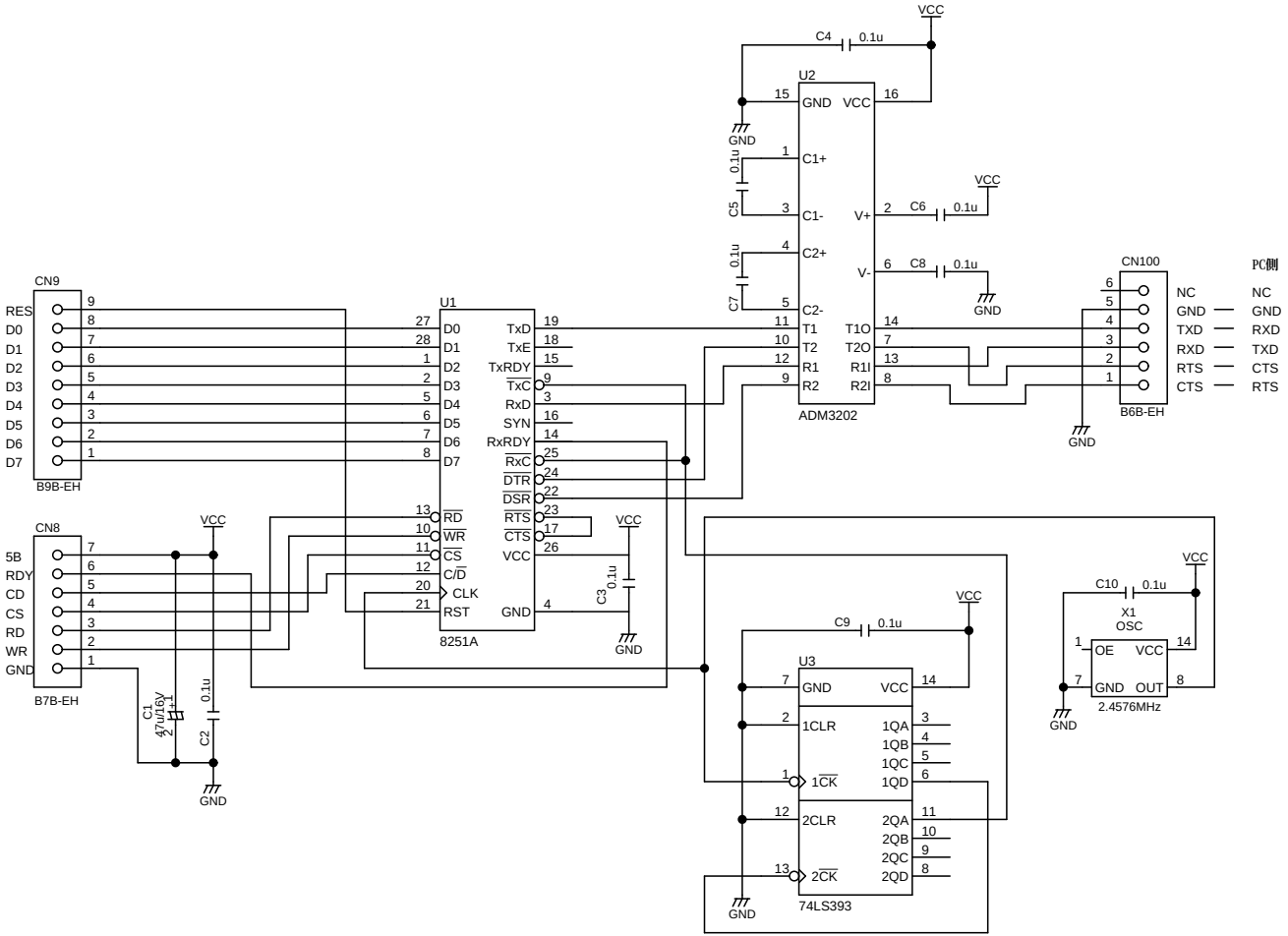
CN9
B9B-EH
RES
D0
D1
D2
D3
D4
D5
D6
D7
CN8
B7B-EH
5B
RDY
CD
CS
RD
WR
GND
U1
8251A
D0
D1
D2
D3
D4
D5
D6
D7
RD
WR
CS
C/D
CLK
RST
TxD
TxE
TxRDY
TxC
RxD
SYN
RxRDY
RxC
DTR
DSR
RTS
CTS
VCC
GND
U2
ADM3202
GND
VCC
C1+
C1-
C2+
C2-
V+
V-
T1
T2
R1
R2
T1O
T2O
R1I
R2I
C4 0.1u
C5 0.1u
C6 0.1u
C7 0.1u
C8 0.1u
C1 47u/16V
C2 0.1u
C3 0.1u
CN100
B6B-EH
NC
GND
TXD
RXD
RTS
CTS
PC側
NC
GND
RXD
TXD
CTS
RTS
U3
74LS393
GND
VCC
1CLR
1CK
1QA
1QB
1QC
1QD
2CLR
2CK
2QA
2QB
2QC
2QD
C9 0.1u
C10 0.1u
X1
OSC
OE
VCC
GND
OUT
2.4576MHz